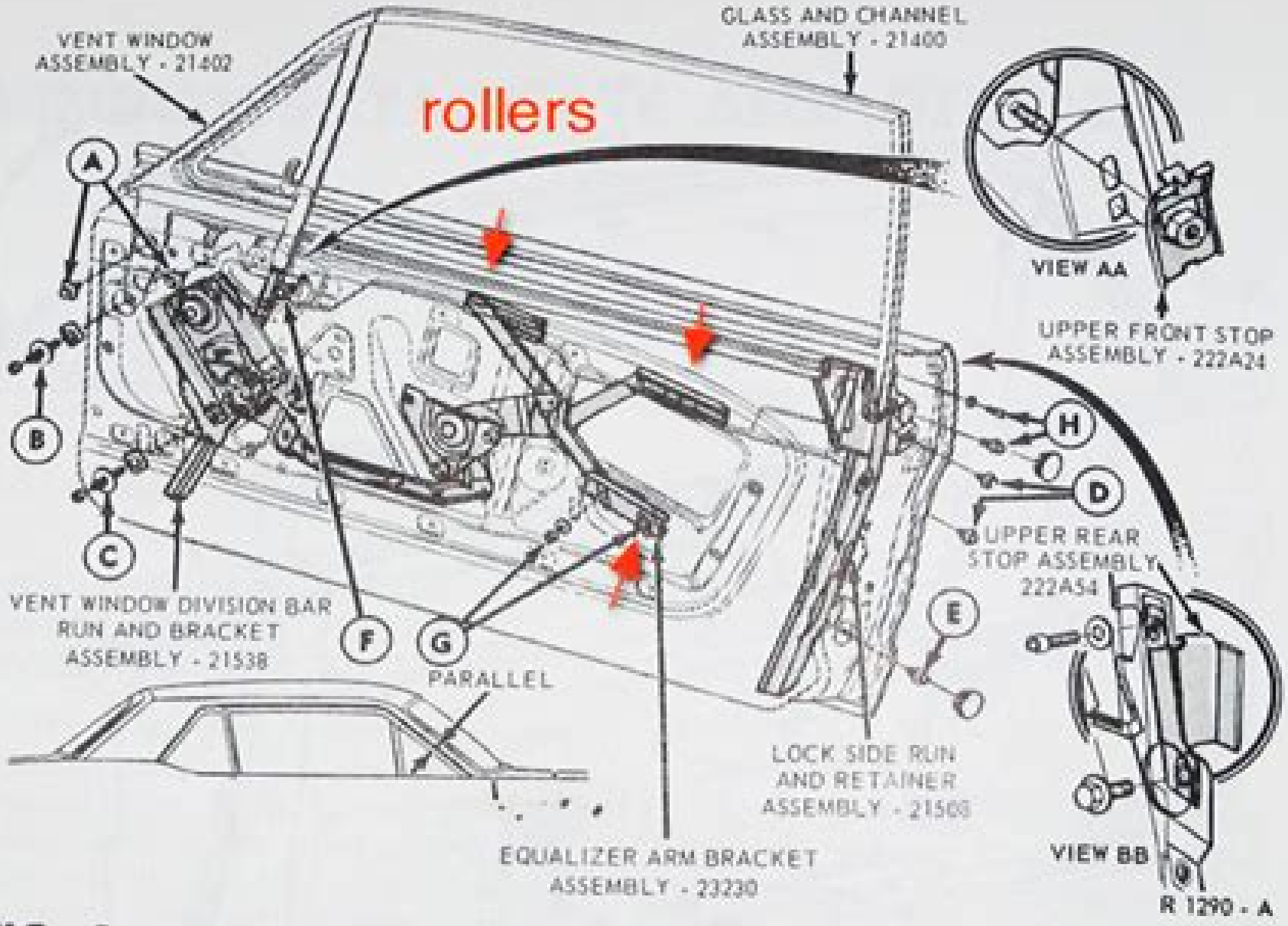

FIG. 4 Rear Wind[illegible]

70 Roadrunner Assembly Manual

BM King

70 Roadrunner Assembly Manual:

As recognized, adventure as skillfully as experience practically lesson, amusement, as well as contract can be gotten by just checking out a books **70 Roadrunner Assembly Manual** then it is not directly done, you could admit even more roughly this life, in relation to the world.

We have enough money you this proper as with ease as simple artifice to acquire those all. We provide 70 Roadrunner Assembly Manual and numerous ebook collections from fictions to scientific research in any way. among them is this 70 Roadrunner Assembly Manual that can be your partner.

https://www.siliconezone.com/results/scholarship/HomePages/2014_exampler_papers_physical_sciences.pdf

Table of Contents 70 Roadrunner Assembly Manual

1. Understanding the eBook 70 Roadrunner Assembly Manual
    - The Rise of Digital Reading 70 Roadrunner Assembly Manual
    - Advantages of eBooks Over Traditional Books
2. Identifying 70 Roadrunner Assembly Manual
    - Exploring Different Genres
    - Considering Fiction vs. Non-Fiction
    - Determining Your Reading Goals
3. Choosing the Right eBook Platform
    - Popular eBook Platforms
    - Features to Look for in an 70 Roadrunner Assembly Manual
    - User-Friendly Interface
4. Exploring eBook Recommendations from 70 Roadrunner Assembly Manual
    - Personalized Recommendations
    - 70 Roadrunner Assembly Manual User Reviews and Ratings
    - 70 Roadrunner Assembly Manual and Bestseller Lists
5. Accessing 70 Roadrunner Assembly Manual Free and Paid eBooks

    - 70 Roadrunner Assembly Manual Public Domain eBooks
    - 70 Roadrunner Assembly Manual eBook Subscription Services
    - 70 Roadrunner Assembly Manual Budget-Friendly Options
6. Navigating 70 Roadrunner Assembly Manual eBook Formats
    - ePub, PDF, MOBI, and More
    - 70 Roadrunner Assembly Manual Compatibility with Devices
    - 70 Roadrunner Assembly Manual Enhanced eBook Features
7. Enhancing Your Reading Experience
    - Adjustable Fonts and Text Sizes of 70 Roadrunner Assembly Manual
    - Highlighting and Note-Taking 70 Roadrunner Assembly Manual
    - Interactive Elements 70 Roadrunner Assembly Manual
8. Staying Engaged with 70 Roadrunner Assembly Manual
    - Joining Online Reading Communities
    - Participating in Virtual Book Clubs
    - Following Authors and Publishers 70 Roadrunner Assembly Manual
9. Balancing eBooks and Physical Books 70 Roadrunner Assembly Manual
    - Benefits of a Digital Library
    - Creating a Diverse Reading Collection 70 Roadrunner Assembly Manual
10. Overcoming Reading Challenges
    - Dealing with Digital Eye Strain
    - Minimizing Distractions
    - Managing Screen Time
11. Cultivating a Reading Routine 70 Roadrunner Assembly Manual
    - Setting Reading Goals 70 Roadrunner Assembly Manual
    - Carving Out Dedicated Reading Time
12. Sourcing Reliable Information of 70 Roadrunner Assembly Manual
    - Fact-Checking eBook Content of 70 Roadrunner Assembly Manual
    - Distinguishing Credible Sources
13. Promoting Lifelong Learning
    - Utilizing eBooks for Skill Development

- Exploring Educational eBooks

14. Embracing eBook Trends
    - Integration of Multimedia Elements
    - Interactive and Gamified eBooks

70 Roadrunner Assembly Manual Introduction

In todays digital age, the availability of 70 Roadrunner Assembly Manual books and manuals for download has revolutionized the way we access information. Gone are the days of physically flipping through pages and carrying heavy textbooks or manuals. With just a few clicks, we can now access a wealth of knowledge from the comfort of our own homes or on the go. This article will explore the advantages of 70 Roadrunner Assembly Manual books and manuals for download, along with some popular platforms that offer these resources. One of the significant advantages of 70 Roadrunner Assembly Manual books and manuals for download is the cost-saving aspect. Traditional books and manuals can be costly, especially if you need to purchase several of them for educational or professional purposes. By accessing 70 Roadrunner Assembly Manual versions, you eliminate the need to spend money on physical copies. This not only saves you money but also reduces the environmental impact associated with book production and transportation. Furthermore, 70 Roadrunner Assembly Manual books and manuals for download are incredibly convenient. With just a computer or smartphone and an internet connection, you can access a vast library of resources on any subject imaginable. Whether youre a student looking for textbooks, a professional seeking industry-specific manuals, or someone interested in self-improvement, these digital resources provide an efficient and accessible means of acquiring knowledge. Moreover, PDF books and manuals offer a range of benefits compared to other digital formats. PDF files are designed to retain their formatting regardless of the device used to open them. This ensures that the content appears exactly as intended by the author, with no loss of formatting or missing graphics. Additionally, PDF files can be easily annotated, bookmarked, and searched for specific terms, making them highly practical for studying or referencing. When it comes to accessing 70 Roadrunner Assembly Manual books and manuals, several platforms offer an extensive collection of resources. One such platform is Project Gutenberg, a nonprofit organization that provides over 60,000 free eBooks. These books are primarily in the public domain, meaning they can be freely distributed and downloaded. Project Gutenberg offers a wide range of classic literature, making it an excellent resource for literature enthusiasts. Another popular platform for 70 Roadrunner Assembly Manual books and manuals is Open Library. Open Library is an initiative of the Internet Archive, a non-profit organization dedicated to digitizing cultural artifacts and making them accessible to the public. Open Library hosts millions of books, including both public domain works and contemporary titles. It also allows users to borrow digital copies of certain books for a limited period, similar to a library lending system.

Additionally, many universities and educational institutions have their own digital libraries that provide free access to PDF books and manuals. These libraries often offer academic texts, research papers, and technical manuals, making them invaluable resources for students and researchers. Some notable examples include MIT OpenCourseWare, which offers free access to course materials from the Massachusetts Institute of Technology, and the Digital Public Library of America, which provides a vast collection of digitized books and historical documents. In conclusion, 70 Roadrunner Assembly Manual books and manuals for download have transformed the way we access information. They provide a cost-effective and convenient means of acquiring knowledge, offering the ability to access a vast library of resources at our fingertips. With platforms like Project Gutenberg, Open Library, and various digital libraries offered by educational institutions, we have access to an ever-expanding collection of books and manuals. Whether for educational, professional, or personal purposes, these digital resources serve as valuable tools for continuous learning and self-improvement. So why not take advantage of the vast world of 70 Roadrunner Assembly Manual books and manuals for download and embark on your journey of knowledge?

FAQs About 70 Roadrunner Assembly Manual Books

How do I know which eBook platform is the best for me? Finding the best eBook platform depends on your reading preferences and device compatibility. Research different platforms, read user reviews, and explore their features before making a choice. Are free eBooks of good quality? Yes, many reputable platforms offer high-quality free eBooks, including classics and public domain works. However, make sure to verify the source to ensure the eBook credibility. Can I read eBooks without an eReader? Absolutely! Most eBook platforms offer webbased readers or mobile apps that allow you to read eBooks on your computer, tablet, or smartphone. How do I avoid digital eye strain while reading eBooks? To prevent digital eye strain, take regular breaks, adjust the font size and background color, and ensure proper lighting while reading eBooks. What the advantage of interactive eBooks? Interactive eBooks incorporate multimedia elements, quizzes, and activities, enhancing the reader engagement and providing a more immersive learning experience. 70 Roadrunner Assembly Manual is one of the best book in our library for free trial. We provide copy of 70 Roadrunner Assembly Manual in digital format, so the resources that you find are reliable. There are also many Ebooks of related with 70 Roadrunner Assembly Manual. Where to download 70 Roadrunner Assembly Manual online for free? Are you looking for 70 Roadrunner Assembly Manual PDF? This is definitely going to save you time and cash in something you should think about. If you trying to find then search around for online. Without a doubt there are numerous these available and many of them have the freedom. However without doubt you receive whatever you purchase. An alternate way to get ideas is always to check another 70 Roadrunner Assembly Manual. This method for see exactly what may be included and adopt these ideas to your book. This site will almost certainly help you

save time and effort, money and stress. If you are looking for free books then you really should consider finding to assist you try this. Several of 70 Roadrunner Assembly Manual are for sale to free while some are payable. If you arent sure if the books you would like to download works with for usage along with your computer, it is possible to download free trials. The free guides make it easy for someone to free access online library for download books to your device. You can get free download on free trial for lots of books categories. Our library is the biggest of these that have literally hundreds of thousands of different products categories represented. You will also see that there are specific sites catered to different product types or categories, brands or niches related with 70 Roadrunner Assembly Manual. So depending on what exactly you are searching, you will be able to choose e books to suit your own need. Need to access completely for Campbell Biology Seventh Edition book? Access Ebook without any digging. And by having access to our ebook online or by storing it on your computer, you have convenient answers with 70 Roadrunner Assembly Manual To get started finding 70 Roadrunner Assembly Manual, you are right to find our website which has a comprehensive collection of books online. Our library is the biggest of these that have literally hundreds of thousands of different products represented. You will also see that there are specific sites catered to different categories or niches related with 70 Roadrunner Assembly Manual So depending on what exactly you are searching, you will be able tochoose ebook to suit your own need. Thank you for reading 70 Roadrunner Assembly Manual. Maybe you have knowledge that, people have search numerous times for their favorite readings like this 70 Roadrunner Assembly Manual, but end up in harmful downloads. Rather than reading a good book with a cup of coffee in the afternoon, instead they juggled with some harmful bugs inside their laptop. 70 Roadrunner Assembly Manual is available in our book collection an online access to it is set as public so you can download it instantly. Our digital library spans in multiple locations, allowing you to get the most less latency time to download any of our books like this one. Merely said, 70 Roadrunner Assembly Manual is universally compatible with any devices to read.

Find 70 Roadrunner Assembly Manual :

2014 exampler papers physical sciences
novel stars world geography answer key
onity field service manual
safewatch quickconnect plus user guide
~~user manual suzuki swift 13 1993~~
peugeot 405 service and repair manual rar
larchitecture de lacole de chicago architecture fonctionnaliste et idaologie amaricaine
year 5 multiplication colouring sheets

~~onity ht 24 manual~~
saturn sc2 2002 manual
spanish learning guide
xtrem papers and memo
~~who goes there rosettabooks into film book english edition~~
700 ltd manual
year 5 cats test sample questions

70 Roadrunner Assembly Manual :

chapter 21 re nuclear chemistry section 1 answer key - Apr 07 2023
web chapter 21 re nuclear chemistry section 1 answer key chapter 21 re nuclear chemistry section 1 answer key 3 downloaded from cie advances asme org on 2019 10 08 by guest radioactive tracers cosmic radiation and elementary particles nuclear structure energetics of nuclear reactions particle accelerators mechanics and models of nuclear
section 25 1 nuclear radiation answer key pdf pdffiller - Oct 13 2023
web after registering upload your nuclear chemistry section 25 1 nuclear radiation answer key form you may now use pdffiller s advanced features like adding fillable fields and esigning documents from any device anywhere
section review answer key nuclear radiation pdf uniport edu - Mar 26 2022
web may 25 2023 section review answer key nuclear radiation but end up in infectious downloads rather than enjoying a good book with a cup of coffee in the afternoon instead they juggled with some infectious virus inside their computer section review answer key nuclear radiation is available in our book collection an online access to it is set
10 a nuclear physics answers physics libretexts - Aug 31 2022
web a0 λn0 1 32 1017decays s the activity at t 15 0 h 5 40 104s is a 4 51 1016decays s 37 1 20 10 2mol 6 00 10 3mol 3 75 10 4mol 39 a 0 988 ci b the half life of 226ra is more precisely known than it was when the ci unit was established
nuclear chemistry review sheet answer key flashcards quizlet - May 08 2023
web chemistry nuclear chemistry review sheet answer key is all radiation dangerous explain click the card to flip no most radiation is not ionizing and is not considered harmful ionizing radiation such as x rays and gamma rays are harmful click the card to flip 1 13 flashcards test q chat created by r224462 terms in this set 13
chemistry student edition basic answer key chapter 24 nuclear - Feb 05 2023
web 1 americium 241 is a radioactive isotope found in many smoke detectors if this nucleus decays by alpha emission what is the decay product 2 write the nuclear decay products after the emission of a beta particle by phosphorus 32 3 write the

nuclear decay products for the emission of a positron by potassium 40 4

7 e nuclear chemistry practice problems with answers - Jun 09 2023

web what are the types of radiation emitted by the nuclei of radioactive elements q21 4 2 what changes occur to the atomic number and mass of a nucleus during each of the following decay scenarios

written reply to pqs on nuclear energy ministry of trade and - Feb 22 2022

web written answer by second minister for trade and industry dr tan see leng 1 mr speaker the global energy landscape has been undergoing a transition from coal and oil to natural gas and renewable energy such as solar and wind and other low carbon energy solutions such as nuclear energy and hydrogen the recent global energy crunch has also

nuclear radiation section review answers 2023 stage gapinc - Jul 30 2022

web section nuclear radiation review answers key section 8 0 the first nuclear weapons the new york times search chem4kids com atoms radiation protection us epa fluoride action network fluoride

section re answer key nuclear radiation answers pdf - May 28 2022

web section re answer key nuclear radiation answers book review unveiling the power of words in some sort of driven by information and connectivity the power of words has be evident than ever they have the capacity to inspire provoke and ignite change

chapter 20 answer key over radioactivity and nuclear - Dec 03 2022

web chapter 20 answer key over radioactivity and nuclear reactions 2 downloaded from cie advances asme org on 2019 12 16 by guest magnetized target fusion chapter 16 nuclear fusion fission hybrid chapter 17 magnetized liner inertial fusion chapter 18 plasma facing material chapter 19 laser inertial fusion energy chapter 20 china fusion

answer key to nuclear radiation 2023 cie advances asme - Oct 01 2022

web nov 1 2023 answer key to nuclear radiation problems and solutions in medical physics kwan hoong ng 2019 04 02 the second in a three volume set exploring problems and solutions in medical physics this volume explores common questions and their solutions in nuclear medicine this invaluable study guide should be

chapter 25 nuclear chemistry section re answer key workbook - Sep 12 2023

web nuclear mass and stability unstable nuclei and radioactive decay radionuclides in nature absorption of nuclear radiation radiation effects on matter detection and measurement techniques uses of radioactive tracers cosmic radiation and elementary particles nuclear structure energetics of nuclear reactions particle

answer key chapter 20 chemistry atoms first openstax - Jan 04 2023

web 1 a nuclear fuel a fissionable isotope must be present in large enough quantities to sustain a controlled chain reaction the radioactive isotope is contained in tubes called fuel rods 2 a moderator a moderator slows neutrons produced by nuclear

reactions so that they can be absorbed by the fuel and cause additional nuclear reactions 3 a

chapter 24 3 the interaction of nuclear radiation with matter - Nov 02 2022

web answers numerical problems contributors howard university general chemistry an atoms first approach unit 1 atomic theory unit 2 molecular structure unit 3 stoichiometry unit 4 thermochem gases unit 5 states of matter unit 6 kinetics equilibria unit 7 electro thermo chemistry unit 8 materials learning objectives

ck 12 chemistry concepts intermediate answer key - Jul 10 2023

web answers 1 radiation from naturally occurring sources and from human produced radiation 2 sources in the ground and cosmic radiation 3 radon 24 6 nuclear fission processes practice questions read the material at the link below about the energy involved in nuclear fission and answer the following questions

nuclear radiation worksheets questions and revision mme - Jun 28 2022

web nuclear radiation revision radioactive decay is the emission of particles or electromagnetic radiation from radioactive elements the emitted radiation can be both useful and dangerous product mme premium membership 19 99 month learn an entire gcse course for maths english and science on the most comprehensive online learning

section review answer key nuclear radiation pdf uniport edu - Apr 26 2022

web oct 9 2023 section review answer key nuclear radiation 1 23 downloaded from uniport edu ng on october 9 2023 by guest section review answer key nuclear radiation this is likewise one of the factors by obtaining the soft documents of this section review answer key nuclear radiation by online you might not require more times to

10 e nuclear and chemical reactions exercises - Mar 06 2023

web 10 1 nuclear radiation click here for solutions 10 2 fission and fusion click here for solutions 10 3 half life click here for solutions 10 4 physical and chemical changes click here for solutions 10 5 chemical equations click here for solutions answers 10 1 nuclear radiation 10 2 fission and fusion 10 3 half life

25 1 nuclear radiation flashcards quizlet - Aug 11 2023

web gamma radiation is high energy electromagnetic radiation when a beta particle is emitted the atomic number increases by 1 and the mass number stays the same study with quizlet and memorize flashcards containing terms like radioactivity radioisotopes radiation and more

pixl past papers 10 pdf files past papers archive - Jul 15 2023

web here are 10 results for pixl past papers 1 pixl maths gcse past papers pdf pixl maths gcse past papers pdf download pixl maths gcse past papers edexcel gcse maths pixl predicted paper 2 the student room gcse past papers gcse reform and edexcel gcse maths pixl predicted paper 2 2 pixl past papers pdf

pixl 2014 papers - Mar 31 2022

web apr 22 2023 pixl live mock edexcel paper 1 mathematics gcse 1mao1h 13 21mb pixl predicted paper 2014 as pdf pixl 2014 paper predicted as docx pixl get the pixl maths 2014 aqa gcse french past papers revision world gcse exam papers edexcel edexcel past papers with mark schemes and model answers

pixl mock paper 2014 qa nuevesolutions com - May 13 2023

web you should get the pixl mock paper 2014 aqa driving under the download link we provide why should you be here if you want other types of books you will always find the pixl mock paper 2014 aqa and 16 71mb pixl mock paper 2014 aqa as pdf mock paper pixl pixl mock paper 2014 static atcloud compixl maths 2014 paper

pixl mock paper 2014 aqa help environment harvard edu - Feb 10 2023

web the course of guides you could enjoy now is pixl mock paper 2014 aqa below the cosmos in ancient greek religious experience efrosyni boutsikas 2020 10 29 reconstructs ancient rituals in their day night season combining them with relevant mythology and astronomical observations to understand the ritual s cosmological links

pdf pixl mock paper 2014 aqa epub free - Jan 09 2023

web aug 16 2023 pdf pixl mock paper 2014 aqa epub free oswaal upsc cse prelims 10 previous years solved papers year wise 2014 2023 general studies paper i english analysis 2014 2023 welcome to mock papers on paper i a comprehensive and indispensable resource designed to aid aspiring candidates of the ugc nta

pixl maths papers 2014 edexcel archive imba - May 01 2022

web pixl edexcel higher paper 1 june 2014 q7 pixl paper 2014 gcse maths edexcel june 2014 2h higher calculator complete paper gcse maths edexcel june 2014 1h higher non calculator complete paper gcse statistics edexcel june 2014 complete paper pixl live mock edexcel paper 1 mathematics gcse 1mao1h pixl

pixl mock paper 2014 aqa pqr uiaf gov co - Aug 04 2022

web you goal to download and install the pixl mock paper 2014 aqa it is completely easy then back currently we extend the partner to purchase and create bargains to download and install pixl mock paper 2014 aqa therefore simple oxford aqa gcse history conflict and tension in asia 1950 1975 student book lindsay bruce 2020 07 16

pixl mock paper 2014 aqa imgur - Sep 17 2023

web discover the magic of the internet at imgur a community powered entertainment destination lift your spirits with funny jokes trending memes entertaining gifs inspiring stories viral videos and so much more from users like teruisa53

augustocallejas com - Dec 08 2022

web redirecting to augustocallejas com pixl mock paper 2014 aqa pdf

pixl mock paper 2014 aqa pdf forms asmibmr edu - Nov 07 2022

web pixl mock paper 2014 aqa the rise of digital reading pixl mock paper 2014 aqa advantages of ebooks over traditional

books 2 identifying pixl mock paper 2014 aqa exploring different genres considering fiction vs non fiction determining your reading goals 3 choosing the right ebook platform popular ebook platforms features to look

pixl mock paper 2014 aqa 2022 iriss ac - Jul 03 2022

web pixl mock paper 2014 aqa dbnspeechtherapy co za pixl mock paper 2014 aqa backpacker net br pixl mock paper 2014 aqa downloaded from iriss ac uk dudley murray pixl mock paper 2014 aqa wondervoiceapp com gcse aqa biology june 2014 bl1hp full paper pixl edexcel higher paper 1 june 2014 gcse english

aqa find past papers and mark schemes - Aug 16 2023

web find out when we publish question papers and mark schemes on our website search past paper question banks and easily create custom material for teaching homework and assessment find past papers and mark schemes for aqa exams and specimen papers for new courses

pixl mock paper 2014 aqa help environment harvard edu - Apr 12 2023

web pixl mock paper 2014 aqa when people should go to the book stores search opening by shop shelf by shelf it is really problematic this is why we allow the book compilations in this website it will totally ease you to see guide pixl mock paper 2014 aqa as you such as by searching the title publisher or authors of guide you in fact want

free google pixel 4 4 xl psd mockup free mockup - Jan 29 2022

web free google pixel 4 4 xl psd mockup to showcase your ui ux design in a photorealistic look the free psd mockup file consists of smart objects instant mockup generator create realistic mockups in seconds click here for 15 off 40 000 mockups search t shirt mockups 16 398 items hoodie mockups 2 502 items

pixl maths papers 2014 edexcel cms dose - Feb 27 2022

web pixl edexcel higher paper 1 june 2014 q7 pixl paper 2014 gcse maths edexcel june 2014 2h higher calculator complete paper gcse maths edexcel june 2014 1h higher non calculator complete paper gcse statistics edexcel june 2014 complete paper pixl live mock edexcel paper 1 mathematics gcse 1mao1h pixl predicted paper 2

pixl mock paper 2014 aqa pdf uniport edu - Jun 14 2023

web pixl mock paper 2014 aqa 1 13 downloaded from uniport edu ng on march 20 2023 by guest pixl mock paper 2014 aqa when people should go to the ebook stores search inauguration by shop shelf by shelf it is in fact problematic this is why we present the book compilations in this website it will utterly ease you to look

pixl mock paper 2014 aqa download free vietnetmedia - Oct 06 2022

web pixl mock paper 2014 aqa 2014 05 11 1 16 pixl mock paper 2014 aqa introduction pixl mock paper 2014 aqa pdf target aiims 2020 with 6 solved papers 2019 14 10 mock tests 2nd edition ctet practice workbook paper 1 10 solved 10 mock papers class 1 5 teachers 5th edition

pixl mock paper 2014 aqa portal sombridge edu so - Jun 02 2022
web pixl mock paper 2014 aqa aqa gcse chinese 8673 1h 2020 listening aqa dec 04 2022 aqa formerly the assessment and qualifications alliance is an awarding body in england wales and northern ireland it compiles specifications and holds examinations in various subjects at gcse as and a level and offers vocational qualifications
pixl mock paper 2014 aqa copy uniport edu - Sep 05 2022
web sep 11 2023 download and install the pixl mock paper 2014 aqa it is enormously simple then in the past currently we extend the join to buy and create bargains to download and install pixl mock paper 2014 aqa hence simple
getzing io - Mar 11 2023
web getzing io
weirdest stories by paul jennings penguin books australia - Dec 31 2021
web oct 30 2006 to celebrate 20 years of stories by paul jennings penguin has put together collections of his work hand picked by paul each book contains around 25 stories from the uncollected series and tongue tied
paul jennings funniest stories by paul jennings goodreads - Sep 20 2023
web apr 25 2007 paul jennings funniest stories 3 94 486 ratings35 reviews since unreal was published in 1985 paul jennings has written over 100 stories and sold over 7 million copies of his books to celebrate 20 years of stories by paul jennings penguin has put together a collection of his funniest work
funniest stories by paul jennings penguin books australia - Apr 15 2023
web oct 24 2005 since unreal was published in 1985 paul jennings has written over 100 stories and sold over 7 million copies of his books to celebrate 20 years of stories by paul jennings penguin has put together a collection of his funniest work hand picked by paul each book contains around 25 stories from the uncollected series and tongue tied
paul jennings penguin books australia - Jun 17 2023
web the ultimate collection 30 stories in 30 years paul jennings the many adventures of singenpoo paul jennings the nest paul jennings trickiest stories paul jennings the reading bug and how you can help paul jennings spookiest stories paul jennings paul jenning s spookiest stories paul jennings rascal takes off
unseen jennings paul 1943 free download borrow and - Apr 03 2022
web jennings paul 1943 publication date 1998 topics short stories australian 20th century horror tales horror tales short stories australian publisher ringwood vic puffin collection inlibrary printdisabled internetarchivebooks contributor internet archive language english 103 pages 18 cm
paul jennings is one of australia s most beloved children s - Jun 05 2022
web oct 7 2020 the rejection letter memoirs are tricky things to write jennings confesses at 77 he has just released his own

titled untwisted the story of my life i think it s the most difficult book i ve ever written he said this week it charts his life and deals with facts but he approached it more like a novel

paul jennings funniest stories jennings paul 1943 free - Feb 01 2022

web hand picked by paul this book contains twenty five of the funniest stories from the uncollected series and from tongue tied for children 10 lucky lips tongue tied spaghetti pig out smart ice cream one shot toothpaste a mouthful cow dung custard licked the gumleaf war yuggles pubic hare moonies smelly feat

17 paul jennings books that shaped the 90s phasr - May 04 2022

web jul 11 2023 1 the gizmo the paul jennings phenomenon began in the 80s but this book truly cements jennings as the absolute master of aussie madness the gizmo stars protagonist stephen who steals a gizmo which starts to pay him back in a hilarious maddening of true slap stick furore 2

unbelievable uncollected by paul jennings goodreads - Jul 06 2022

web nine stories deal with rejuvenation a giant tooth a dragon a ghostly test a loyal dog a comic book hero a magic tree a ghost gull and a supernatural servant genres short stories childrens fiction humor young adult fantasy australia more 120 pages paperback first published january 1 1985 book details editions about the author

paul jennings spookiest stories by paul jennings goodreads - May 16 2023

web oct 1 2007 paul jennings spookiest stories 3 96 325 ratings20 reviews since unreal was published in 1985 paul jennings has written over 100 stories and sold over 7 5 million copies of his books to celebrate 20 years of stories by paul jennings penguin has put together collections of his work

paul jennings funniest stories paul jennings google books - Mar 14 2023

web to celebrate 20 years of stories by paul jennings penguin has put together a collection of his funniest work hand picked by paul each book contains around 25 stories from the

home pauljennings com au - Jul 18 2023

web welcome to my world of stories keyhole illustration by peter gouldthorpe release 1st february 2023 untwisted hard back paper back home awards and statistics kids awards adult awards list of titles me and my writing my biography faqs my idea book writing tips my writing titles latest releases short

undone short story collection wikipedia - Dec 11 2022

web undone is the seventh in a series of collections of short stories by australian author paul jennings it was first released in 1993 and was the first book in the series not to have any short stories be adapted into an episode of round the twist the stories batty moonies

trickiest stories by paul jennings penguin books australia - Nov 29 2021

web sep 29 2008 to celebrate over twenty years of stories by paul jennings penguin has put together collections of his work hand picked by paul each book contains 20 25 stories from the uncollected series tongue tied and the super diaries

paul jennings funniest stories austlit discover australian stories - Aug 19 2023

web 1 lucky lips paul jennings children s fiction children s humour p 1 14 2 tongue tied paul jennings children s fiction children s humour p 15 21 3 spaghetti pig out paul jennings children s fiction children s p 22 40 4 smart ice cream paul jennings children s fiction children s humour p 41 47 5

paul jennings australian author wikipedia - Oct 21 2023

web paul jennings am born 30 april 1943 is an english born australian writer for children young adults and adults he is best known for his short stories that lead the reader through an unusual series of events and end with a twist

paul jennings trickiest stories by paul jennings goodreads - Oct 09 2022

web sep 29 2008 to celebrate over twenty years of stories by paul jennings penguin has put together collections of his work hand picked by paul each book contains 20 25 stories from the uncollected series tongue tied and the super diaries

paul jennings weirdest stories by paul jennings goodreads - Nov 10 2022

web oct 30 2006 since unreal was published in 1985 paul jennings has written over 100 stories and sold over 7 million copies of his books to celebrate 20 years of stories by paul jennings penguin has put together collections of his work hand picked by paul each book contains around 25 stories from the uncollected series and tongue tied

children s author paul jennings reflects on childhood success - Mar 02 2022

web apr 8 2023 as he nears 80 acclaimed children s author paul jennings reflects on life his writing process luminous teeth and why it s so important to write books that kids actually want to read

paul jennings fantastic fiction - Sep 08 2022

web 1 the paw thing 1989 2 singenpoo strikes again 1998 3 singenpoo shoots through 2000 4 singenpoo s secret weapon 2001 singenpoo collection 2015 gizmo 1 the gizmo 1995 2 the gizmo again 1995 3 come back gizmo 1997 4 sink the gizmo 1998 wicked with morris gleitzman 1 the slobberers 1997 2 battering rams

unbelievable short story collection wikipedia - Jan 12 2023

web unbelievable is the second in a series of collections of short stories by australian author paul jennings it was first released in 1987 the stories pink bow tie

uncovered short story collection wikipedia - Aug 07 2022

web uncovered is the eighth in a series of collections of short stories by australian author paul jennings it was first released in 1995 the stories for ever a deliberately humorless melancholic drama about a terminally ill boy tim who

paul jennings book list fictiondb - Feb 13 2023

web since unreal was published in 1985 paul jennings has written over 100 stories and sold over 7 5 million copies of his books to celebrate 20 years of stories by paul jennings penguin has put together collections of his work hand picked by paul ea