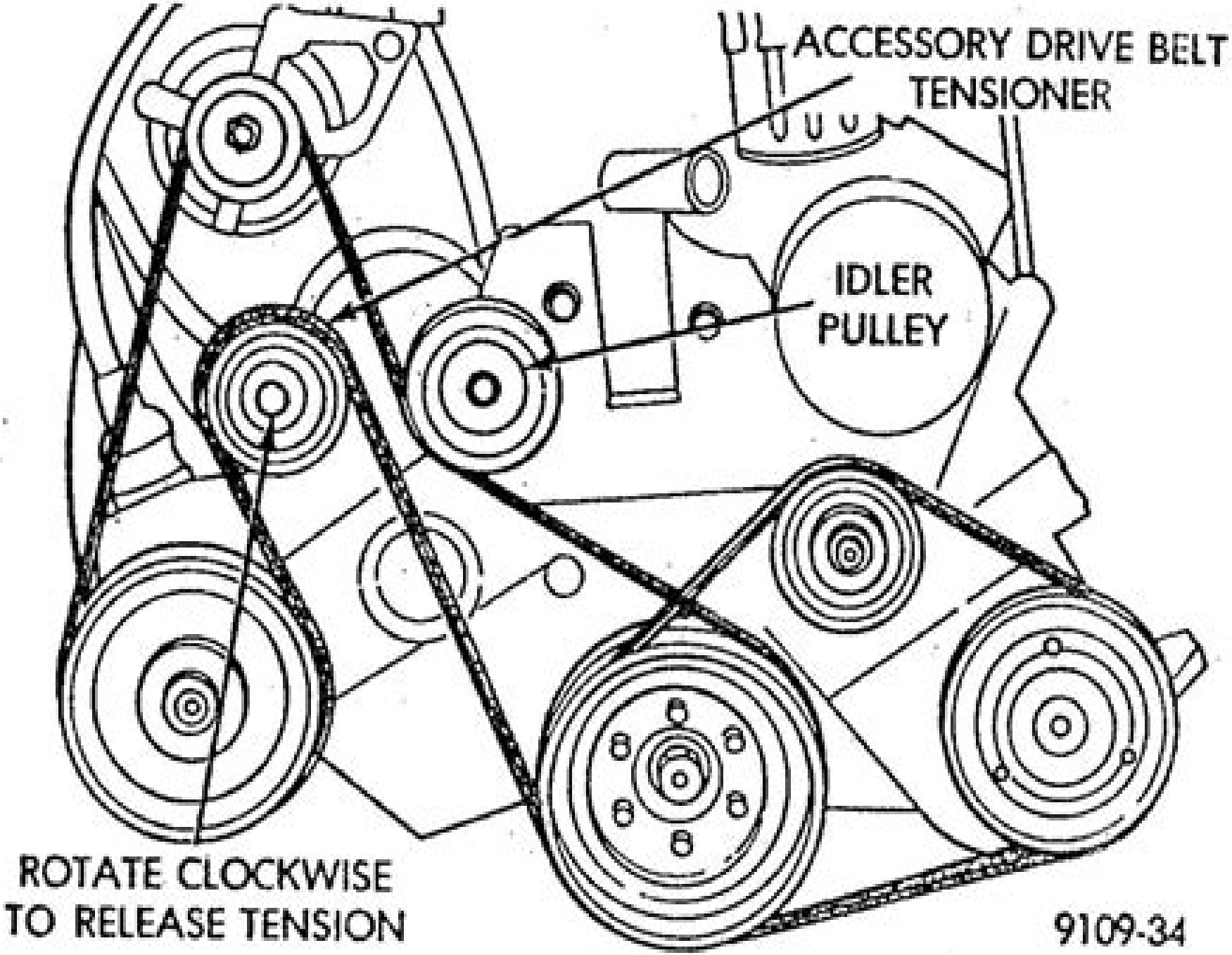
ACCESSORY DRIVE BELT
TENSIONER
IDLER
PULLEY
ROTATE CLOCKWISE
TO RELEASE TENSION
9109-34

Dodge Dakota Belt Guide

Joacim Rocklöv

Dodge Dakota Belt Guide:

Yeah, reviewing a books **Dodge Dakota Belt Guide** could increase your near links listings. This is just one of the solutions for you to be successful. As understood, talent does not recommend that you have astounding points.

Comprehending as well as concurrence even more than other will provide each success. next to, the broadcast as well as keenness of this Dodge Dakota Belt Guide can be taken as skillfully as picked to act.

https://www.siliconezone.com/results/browse/index.jsp/Girl_Guide_Program.pdf

Table of Contents Dodge Dakota Belt Guide

1. Understanding the eBook Dodge Dakota Belt Guide
    - The Rise of Digital Reading Dodge Dakota Belt Guide
    - Advantages of eBooks Over Traditional Books
2. Identifying Dodge Dakota Belt Guide
    - Exploring Different Genres
    - Considering Fiction vs. Non-Fiction
    - Determining Your Reading Goals
3. Choosing the Right eBook Platform
    - Popular eBook Platforms
    - Features to Look for in an Dodge Dakota Belt Guide
    - User-Friendly Interface
4. Exploring eBook Recommendations from Dodge Dakota Belt Guide
    - Personalized Recommendations
    - Dodge Dakota Belt Guide User Reviews and Ratings
    - Dodge Dakota Belt Guide and Bestseller Lists
5. Accessing Dodge Dakota Belt Guide Free and Paid eBooks
    - Dodge Dakota Belt Guide Public Domain eBooks
    - Dodge Dakota Belt Guide eBook Subscription Services

    - Dodge Dakota Belt Guide Budget-Friendly Options
6. Navigating Dodge Dakota Belt Guide eBook Formats
    - ePub, PDF, MOBI, and More
    - Dodge Dakota Belt Guide Compatibility with Devices
    - Dodge Dakota Belt Guide Enhanced eBook Features
7. Enhancing Your Reading Experience
    - Adjustable Fonts and Text Sizes of Dodge Dakota Belt Guide
    - Highlighting and Note-Taking Dodge Dakota Belt Guide
    - Interactive Elements Dodge Dakota Belt Guide
8. Staying Engaged with Dodge Dakota Belt Guide
    - Joining Online Reading Communities
    - Participating in Virtual Book Clubs
    - Following Authors and Publishers Dodge Dakota Belt Guide
9. Balancing eBooks and Physical Books Dodge Dakota Belt Guide
    - Benefits of a Digital Library
    - Creating a Diverse Reading Collection Dodge Dakota Belt Guide
10. Overcoming Reading Challenges
    - Dealing with Digital Eye Strain
    - Minimizing Distractions
    - Managing Screen Time
11. Cultivating a Reading Routine Dodge Dakota Belt Guide
    - Setting Reading Goals Dodge Dakota Belt Guide
    - Carving Out Dedicated Reading Time
12. Sourcing Reliable Information of Dodge Dakota Belt Guide
    - Fact-Checking eBook Content of Dodge Dakota Belt Guide
    - Distinguishing Credible Sources
13. Promoting Lifelong Learning
    - Utilizing eBooks for Skill Development
    - Exploring Educational eBooks
14. Embracing eBook Trends

- Integration of Multimedia Elements
- Interactive and Gamified eBooks

Dodge Dakota Belt Guide Introduction

Free PDF Books and Manuals for Download: Unlocking Knowledge at Your Fingertips In todays fast-paced digital age, obtaining valuable knowledge has become easier than ever. Thanks to the internet, a vast array of books and manuals are now available for free download in PDF format. Whether you are a student, professional, or simply an avid reader, this treasure trove of downloadable resources offers a wealth of information, conveniently accessible anytime, anywhere. The advent of online libraries and platforms dedicated to sharing knowledge has revolutionized the way we consume information. No longer confined to physical libraries or bookstores, readers can now access an extensive collection of digital books and manuals with just a few clicks. These resources, available in PDF, Microsoft Word, and PowerPoint formats, cater to a wide range of interests, including literature, technology, science, history, and much more. One notable platform where you can explore and download free Dodge Dakota Belt Guide PDF books and manuals is the internets largest free library. Hosted online, this catalog compiles a vast assortment of documents, making it a veritable goldmine of knowledge. With its easy-to-use website interface and customizable PDF generator, this platform offers a user-friendly experience, allowing individuals to effortlessly navigate and access the information they seek. The availability of free PDF books and manuals on this platform demonstrates its commitment to democratizing education and empowering individuals with the tools needed to succeed in their chosen fields. It allows anyone, regardless of their background or financial limitations, to expand their horizons and gain insights from experts in various disciplines. One of the most significant advantages of downloading PDF books and manuals lies in their portability. Unlike physical copies, digital books can be stored and carried on a single device, such as a tablet or smartphone, saving valuable space and weight. This convenience makes it possible for readers to have their entire library at their fingertips, whether they are commuting, traveling, or simply enjoying a lazy afternoon at home. Additionally, digital files are easily searchable, enabling readers to locate specific information within seconds. With a few keystrokes, users can search for keywords, topics, or phrases, making research and finding relevant information a breeze. This efficiency saves time and effort, streamlining the learning process and allowing individuals to focus on extracting the information they need. Furthermore, the availability of free PDF books and manuals fosters a culture of continuous learning. By removing financial barriers, more people can access educational resources and pursue lifelong learning, contributing to personal growth and professional development. This democratization of knowledge promotes intellectual curiosity and empowers individuals to become lifelong learners, promoting progress and innovation in various fields. It is worth noting that while accessing free Dodge Dakota Belt Guide PDF books and manuals is convenient and cost-effective, it is vital to respect

copyright laws and intellectual property rights. Platforms offering free downloads often operate within legal boundaries, ensuring that the materials they provide are either in the public domain or authorized for distribution. By adhering to copyright laws, users can enjoy the benefits of free access to knowledge while supporting the authors and publishers who make these resources available. In conclusion, the availability of Dodge Dakota Belt Guide free PDF books and manuals for download has revolutionized the way we access and consume knowledge. With just a few clicks, individuals can explore a vast collection of resources across different disciplines, all free of charge. This accessibility empowers individuals to become lifelong learners, contributing to personal growth, professional development, and the advancement of society as a whole. So why not unlock a world of knowledge today? Start exploring the vast sea of free PDF books and manuals waiting to be discovered right at your fingertips.

FAQs About Dodge Dakota Belt Guide Books

How do I know which eBook platform is the best for me? Finding the best eBook platform depends on your reading preferences and device compatibility. Research different platforms, read user reviews, and explore their features before making a choice. Are free eBooks of good quality? Yes, many reputable platforms offer high-quality free eBooks, including classics and public domain works. However, make sure to verify the source to ensure the eBook credibility. Can I read eBooks without an eReader? Absolutely! Most eBook platforms offer web-based readers or mobile apps that allow you to read eBooks on your computer, tablet, or smartphone. How do I avoid digital eye strain while reading eBooks? To prevent digital eye strain, take regular breaks, adjust the font size and background color, and ensure proper lighting while reading eBooks. What the advantage of interactive eBooks? Interactive eBooks incorporate multimedia elements, quizzes, and activities, enhancing the reader engagement and providing a more immersive learning experience. Dodge Dakota Belt Guide is one of the best book in our library for free trial. We provide copy of Dodge Dakota Belt Guide in digital format, so the resources that you find are reliable. There are also many Ebooks of related with Dodge Dakota Belt Guide. Where to download Dodge Dakota Belt Guide online for free? Are you looking for Dodge Dakota Belt Guide PDF? This is definitely going to save you time and cash in something you should think about.

Find Dodge Dakota Belt Guide :

girl guide program
~~gideon your weakness gods strength dvd leader kit~~

gfebs user reference manual integrated process overview
girl power faithgirlz or girls of harbor view
girl with the birdsnest hair
getting started with sql server 2012 cube development author simon lidberg sep 2013
gilera nexus 250 user manual
giant whitetails a lifetime of lessons by mark drury 2005 11 03
giethoorn dorp tussen de wieden
girl guide unit welcome letter sample
giants the parallel lives of frederick douglass and abraham lincoln
gibson furnace installation manual
ghost stories of m r james
gibson air conditioner heat pump manual
ghostly matters haunting and the sociological imagination

Dodge Dakota Belt Guide :

2004 us national chemistry olympiad - local section exam Local Sections may use an answer sheet of their own choice. The full examination consists of 60 multiple-choice questions representing a fairly wide range of ... 2004 U. S. NATIONAL CHEMISTRY OLYMPIAD Part I of this test is designed to be taken with a Scantron® answer sheet on which the student records his or her responses. Only this. Scantron sheet is graded ... Organic-Chemistry-ACS-sample-Questions.pdf ACS Examination guide (Selected Questions). Organic Chemistry. Nomenclature. 1. What is the IUPAC names for this compound? a) 1-tert-butyl-2-butanol b) 5,5 ... National Norms | ACS Exams High School Exams · General Chemistry Exams · General Organic Biochemistry Exams · Analytical Chemistry Exams · Organic Chemistry Exams · Physical Chemistry Exams ... ACS Exams Questions: 70. Time: 110. Stock Code: OR16. Title: 2016 Organic Chemistry Exam - Exam for two-semester Organic Chemistry. Norm: View PDF. Questions: 70. Time: ... Acs Review 2004 | PDF Acs Review 2004 - Free ebook download as PDF File (.pdf) or read book online for free. Organic Chemistry 2004 ACS. ACS Exam Review 2004-4-23-21 - YouTube ACS Organic Chemistry I Final Exam Review Session - YouTube Exam Archives: 3311 (OChem I) ACS organic chem final May 1, 2007 — I am taking my organic chem final next week. Its national exam written by ACS. Just wonder have any of you taken it before. How hard is it? Solutions to Further Problems Risk Management and ... Solutions to Further Problems Risk Management and Financial Institutions Fourth Edition John C. Hull 1 Preface This manual contains answers to all the ... Options, Futures, and Other Derivatives: Course Design Options, Futures, and Other Derivatives, 11th Edition. These *.zip

files contain answers to all end of chapter questions in the 11th edition plus some Excel ... Students Solutions Manual & Study Guid: Hull, John A reader-friendly book with an abundance of numerical and real-life examples. Based on Hull's Options, Futures and Other Derivatives, Fundamentals of Futures ... John c hull options futures and other derivatives solutions ... John c hull options futures and other derivatives solutions manual. Options ... Answers to end-of-chapter questions in the North American edition. Answers ... Students Solutions Manual for Options,... by Hull, John Read more. From the Author. Contains solutions to end-of-chapter questions and problems in Options, Futures, and Other Derivatives, Sixth Edition by John Hull. Book solution options futures and other derivatives john c ... Book solution options futures and other derivatives john c hull chapters 1279111425. Course: Derivative Securities (FINA 3203). OPTIONS, FUTURES, AND OTHER DERIVATIVES ... Further Questions. 9.23. The price of a stock is $40. The price of a 1-year European put option on the stock with a strike price of $30 is quoted as $7 and ... Student Solutions Manual for Fundamentals of Futures and ... Student Solutions Manual for Fundamentals of Futures and Options Markets ; Reihe: Pearson ; Autor: Prof. Dr. John C. Hull / Author Supplement ; Verlag: Pearson ... Options, futures, and other derivatives, ninth edition, global ... A student solutions manual for: Options, futures, and other derivatives, ninth edition, global edition by John C. Hull (ISBN 9780133457414), 2015. A student ... Other Derivatives by Hull, J. C - 2011 Solutions to the Questions and Problems in Options, Futures, and Other Derivatives 8e, published by Pearson, are provided in this Student Solutions Manual. Canadian Securities Course Volume 1 by CSI Canadian Securities Course Volume 1 ; Amazon Customer. 5.0 out of 5 starsVerified Purchase. Great condition. Reviewed in Canada on January 2, 2021. Great ... Canadian Securities Course (CSC®) Exam & Credits The Canadian Securities Course (CSC®) takes 135 - 200 hours of study. Learn about associated CE credits and the CSC® exams. Canadian Securities Course Volume 1 - Softcover Canadian Securities Course Volume 1 by CSI - ISBN 10: 1894289641 - ISBN 13: 9781894289641 - CSI Global Education - 2008 - Softcover. CSC VOLUME ONE: Chapters 1 – 3, Test #1 The general principle underlying Canadian Securities legislation is... a ... If a government issues debt securities yielding 1%, the real return the investor will ... Canadian Securities Course Volume 1 by CSI for sale online Find many great new & used options and get the best deals for Canadian Securities Course Volume 1 by CSI at the best online prices at eBay! Canadian Securities Course Volume 1 9781894289641 ... Customer reviews ... This item doesn't have any reviews yet. ... Debit with rewards.Get 3% cash back at Walmart, upto $50 a year.See terms for eligibility. Learn ... CSC volume 1 practice - - Studocu CSC volume 1 practice. Course: Canadian Seceuirites Course (CSC). Canadian Securities Course (CSC®) This course will help learners fulfill CIRO and provincial regulatory requirements for baseline securities licensing as well as mutual funds sales, alternative ... Canadian Securities Course Volume 1 Passed the first exam, on to volume II now. They put the same emphasis of instruction on easy things as they did for highly complex things so... not ideal but ...