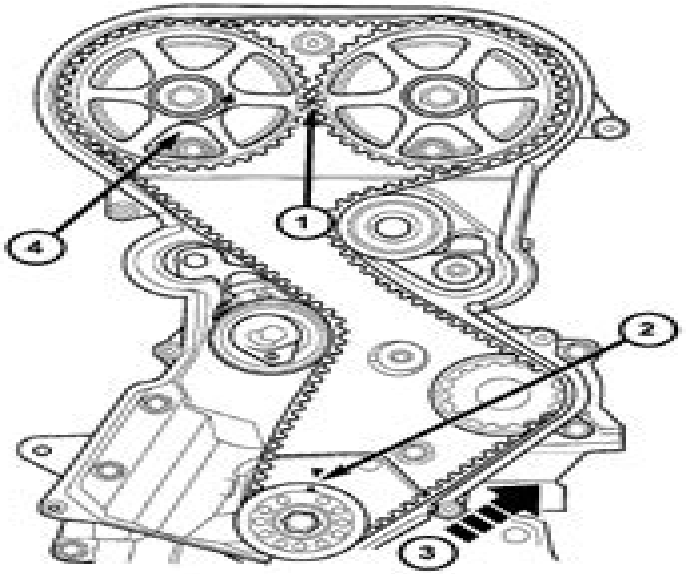
1
2
3
4

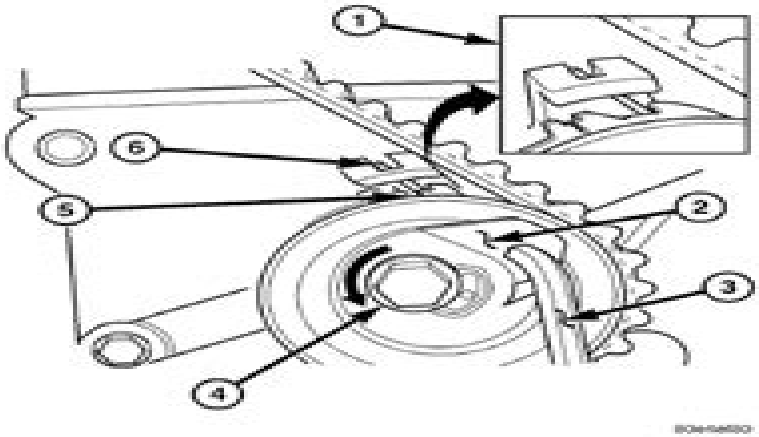
1
2
3
4
5
6

Dodge Neon Timing Belt Repair Manual

Shasha Hu

Dodge Neon Timing Belt Repair Manual:

Delve into the emotional tapestry woven by Emotional Journey with in Experience **Dodge Neon Timing Belt Repair Manual** . This ebook, available for download in a PDF format (PDF Size: *), is more than just words on a page; itis a journey of connection and profound emotion. Immerse yourself in narratives that tug at your heartstrings. Download now to experience the pulse of each page and let your emotions run wild.

https://www.siliconezone.com/public/Resources/Download_PDFS/Mini%20Cooper%20Service%20Manual%202002%202006.pdf

Table of Contents Dodge Neon Timing Belt Repair Manual

1. Understanding the eBook Dodge Neon Timing Belt Repair Manual
    - The Rise of Digital Reading Dodge Neon Timing Belt Repair Manual
    - Advantages of eBooks Over Traditional Books
2. Identifying Dodge Neon Timing Belt Repair Manual
    - Exploring Different Genres
    - Considering Fiction vs. Non-Fiction
    - Determining Your Reading Goals
3. Choosing the Right eBook Platform
    - Popular eBook Platforms
    - Features to Look for in an Dodge Neon Timing Belt Repair Manual
    - User-Friendly Interface
4. Exploring eBook Recommendations from Dodge Neon Timing Belt Repair Manual
    - Personalized Recommendations
    - Dodge Neon Timing Belt Repair Manual User Reviews and Ratings
    - Dodge Neon Timing Belt Repair Manual and Bestseller Lists
5. Accessing Dodge Neon Timing Belt Repair Manual Free and Paid eBooks
    - Dodge Neon Timing Belt Repair Manual Public Domain eBooks
    - Dodge Neon Timing Belt Repair Manual eBook Subscription Services

    - Dodge Neon Timing Belt Repair Manual Budget-Friendly Options
6. Navigating Dodge Neon Timing Belt Repair Manual eBook Formats
    - ePub, PDF, MOBI, and More
    - Dodge Neon Timing Belt Repair Manual Compatibility with Devices
    - Dodge Neon Timing Belt Repair Manual Enhanced eBook Features
7. Enhancing Your Reading Experience
    - Adjustable Fonts and Text Sizes of Dodge Neon Timing Belt Repair Manual
    - Highlighting and Note-Taking Dodge Neon Timing Belt Repair Manual
    - Interactive Elements Dodge Neon Timing Belt Repair Manual
8. Staying Engaged with Dodge Neon Timing Belt Repair Manual
    - Joining Online Reading Communities
    - Participating in Virtual Book Clubs
    - Following Authors and Publishers Dodge Neon Timing Belt Repair Manual
9. Balancing eBooks and Physical Books Dodge Neon Timing Belt Repair Manual
    - Benefits of a Digital Library
    - Creating a Diverse Reading Collection Dodge Neon Timing Belt Repair Manual
10. Overcoming Reading Challenges
    - Dealing with Digital Eye Strain
    - Minimizing Distractions
    - Managing Screen Time
11. Cultivating a Reading Routine Dodge Neon Timing Belt Repair Manual
    - Setting Reading Goals Dodge Neon Timing Belt Repair Manual
    - Carving Out Dedicated Reading Time
12. Sourcing Reliable Information of Dodge Neon Timing Belt Repair Manual
    - Fact-Checking eBook Content of Dodge Neon Timing Belt Repair Manual
    - Distinguishing Credible Sources
13. Promoting Lifelong Learning
    - Utilizing eBooks for Skill Development
    - Exploring Educational eBooks
14. Embracing eBook Trends

- Integration of Multimedia Elements
- Interactive and Gamified eBooks

Dodge Neon Timing Belt Repair Manual Introduction

Free PDF Books and Manuals for Download: Unlocking Knowledge at Your Fingertips In todays fast-paced digital age, obtaining valuable knowledge has become easier than ever. Thanks to the internet, a vast array of books and manuals are now available for free download in PDF format. Whether you are a student, professional, or simply an avid reader, this treasure trove of downloadable resources offers a wealth of information, conveniently accessible anytime, anywhere. The advent of online libraries and platforms dedicated to sharing knowledge has revolutionized the way we consume information. No longer confined to physical libraries or bookstores, readers can now access an extensive collection of digital books and manuals with just a few clicks. These resources, available in PDF, Microsoft Word, and PowerPoint formats, cater to a wide range of interests, including literature, technology, science, history, and much more. One notable platform where you can explore and download free Dodge Neon Timing Belt Repair Manual PDF books and manuals is the internets largest free library. Hosted online, this catalog compiles a vast assortment of documents, making it a veritable goldmine of knowledge. With its easy-to-use website interface and customizable PDF generator, this platform offers a user-friendly experience, allowing individuals to effortlessly navigate and access the information they seek. The availability of free PDF books and manuals on this platform demonstrates its commitment to democratizing education and empowering individuals with the tools needed to succeed in their chosen fields. It allows anyone, regardless of their background or financial limitations, to expand their horizons and gain insights from experts in various disciplines. One of the most significant advantages of downloading PDF books and manuals lies in their portability. Unlike physical copies, digital books can be stored and carried on a single device, such as a tablet or smartphone, saving valuable space and weight. This convenience makes it possible for readers to have their entire library at their fingertips, whether they are commuting, traveling, or simply enjoying a lazy afternoon at home. Additionally, digital files are easily searchable, enabling readers to locate specific information within seconds. With a few keystrokes, users can search for keywords, topics, or phrases, making research and finding relevant information a breeze. This efficiency saves time and effort, streamlining the learning process and allowing individuals to focus on extracting the information they need. Furthermore, the availability of free PDF books and manuals fosters a culture of continuous learning. By removing financial barriers, more people can access educational resources and pursue lifelong learning, contributing to personal growth and professional development. This democratization of knowledge promotes intellectual curiosity and empowers individuals to become lifelong learners, promoting progress and innovation in various fields. It is worth noting that while accessing free Dodge Neon Timing Belt Repair Manual PDF books and manuals is

convenient and cost-effective, it is vital to respect copyright laws and intellectual property rights. Platforms offering free downloads often operate within legal boundaries, ensuring that the materials they provide are either in the public domain or authorized for distribution. By adhering to copyright laws, users can enjoy the benefits of free access to knowledge while supporting the authors and publishers who make these resources available. In conclusion, the availability of Dodge Neon Timing Belt Repair Manual free PDF books and manuals for download has revolutionized the way we access and consume knowledge. With just a few clicks, individuals can explore a vast collection of resources across different disciplines, all free of charge. This accessibility empowers individuals to become lifelong learners, contributing to personal growth, professional development, and the advancement of society as a whole. So why not unlock a world of knowledge today? Start exploring the vast sea of free PDF books and manuals waiting to be discovered right at your fingertips.

FAQs About Dodge Neon Timing Belt Repair Manual Books

1. Where can I buy Dodge Neon Timing Belt Repair Manual books? Bookstores: Physical bookstores like Barnes & Noble, Waterstones, and independent local stores. Online Retailers: Amazon, Book Depository, and various online bookstores offer a wide range of books in physical and digital formats.
2. What are the different book formats available? Hardcover: Sturdy and durable, usually more expensive. Paperback: Cheaper, lighter, and more portable than hardcovers. E-books: Digital books available for e-readers like Kindle or software like Apple Books, Kindle, and Google Play Books.
3. How do I choose a Dodge Neon Timing Belt Repair Manual book to read? Genres: Consider the genre you enjoy (fiction, non-fiction, mystery, sci-fi, etc.). Recommendations: Ask friends, join book clubs, or explore online reviews and recommendations. Author: If you like a particular author, you might enjoy more of their work.
4. How do I take care of Dodge Neon Timing Belt Repair Manual books? Storage: Keep them away from direct sunlight and in a dry environment. Handling: Avoid folding pages, use bookmarks, and handle them with clean hands. Cleaning: Gently dust the covers and pages occasionally.
5. Can I borrow books without buying them? Public Libraries: Local libraries offer a wide range of books for borrowing. Book Swaps: Community book exchanges or online platforms where people exchange books.
6. How can I track my reading progress or manage my book collection? Book Tracking Apps: Goodreads, LibraryThing, and Book Catalogue are popular apps for tracking your reading progress and managing book collections. Spreadsheets: You can create your own spreadsheet to track books read, ratings, and other details.

7. What are Dodge Neon Timing Belt Repair Manual audiobooks, and where can I find them? Audiobooks: Audio recordings of books, perfect for listening while commuting or multitasking. Platforms: Audible, LibriVox, and Google Play Books offer a wide selection of audiobooks.
8. How do I support authors or the book industry? Buy Books: Purchase books from authors or independent bookstores. Reviews: Leave reviews on platforms like Goodreads or Amazon. Promotion: Share your favorite books on social media or recommend them to friends.
9. Are there book clubs or reading communities I can join? Local Clubs: Check for local book clubs in libraries or community centers. Online Communities: Platforms like Goodreads have virtual book clubs and discussion groups.
10. Can I read Dodge Neon Timing Belt Repair Manual books for free? Public Domain Books: Many classic books are available for free as theyre in the public domain. Free E-books: Some websites offer free e-books legally, like Project Gutenberg or Open Library.

Find Dodge Neon Timing Belt Repair Manual :

mini cooper service manual 2002 2006
peugeot 406 1600cc
yamaha cg182c guitars owners manual
manual nirvana 300 hp
manual for bellsouth answering machine
700 answer key study guide
~~larceny and old lace~~
~~boeing 777 ndt manual~~
germany silver burdett countries
campbell essential biology with physiology 4th edition
read miladyintlcatalog2010 final web
larchitecture clientserveur aspects techniques enjeux stratagiques
manual alcatel xp2050
~~blue pelican math pre calc answers~~
onity advance locking system service manual

Dodge Neon Timing Belt Repair Manual :

das weltreich der deutschen von kolonialen träumen kriegen - Mar 09 2023
web 3 sterne 1 2 sterne 0 1 stern 0 sortieren bellis perennis vor 7 jahren kurzmeinung ein für interessierte leser gut aufgemachtes sachbuch an dem historiker möglicherweise kritik

das weltreich der deutschen von kolonialen traume pdf - Oct 24 2021
web jun 3 2023 das weltreich der deutschen von kolonialen traume 2 7 downloaded from uniport edu ng on june 3 2023 by guest die klischees von den bedrohlichen

9783492264891 das weltreich der deutschen von kolonialen - Sep 03 2022
web das weltreich der deutschen von kolonialen träumen kriegen und abenteuern beim zvab com isbn 10 3492264891 isbn 13 9783492264891 softcover

das weltreich der deutschen von kolonialen träumen kriegen - Apr 29 2022
web deutschen von kolonialen das weltreich der deutschen guido knopp deutsche e lüderitzland das weltreich der deutschen in apple books it das weltreich der

das weltreich der deutschen von kolonialen träumen kriegen - Jun 12 2023
web das weltreich der deutschen von kolonialen träumen kriegen und abenteuern by guido knopp die zdf redaktion zeitgeschichte die historischen sachbücher des

das weltreich der deutschen tv doku über die deutschen - Jul 01 2022
web die ab dienstag 6 april 2010 jeweils um 20 15 uhr im zdf zu sehende klein serie das weltreich der deutschen konzentriert sich ganz auf die kolonien in ostafrika in

das weltreich der deutschen von kolonialen traume copy - Feb 25 2022
web kolonialen traume thank you for downloading das weltreich der deutschen von kolonialen traume as you may know people have look hundreds times for their

amazon de kundenrezensionen das weltreich der deutschen - Nov 05 2022
web finde hilfreiche kundenrezensionen und rezensionsbewertungen für das weltreich der deutschen von kolonialen träumen kriegen und abenteuern br in

das weltreich der deutschen von kolonialen traume dirk - Nov 24 2021
web das weltreich der deutschen von kolonialen traume recognizing the pretension ways to get this ebook das weltreich der deutschen von kolonialen traume is additionally

das weltreich der deutschen von kolonialen traume copy - May 31 2022
web das weltreich der deutschen von kolonialen traume 1 das weltreich der deutschen von kolonialen traume berlin bagdad

deutsche kolonien neuguinea und samoa

das weltreich der deutschen von kolonialen träumen kriegen - Feb 08 2023

web auf unserer webseite werden neben den technisch erforderlichen cookies noch cookies zur statistischen auswertung gesetzt deutsches zeitungsportal startseite Über uns

das weltreich der deutschen von kolonialen träumen kriegen - May 11 2023

web das weltreich der deutschen ist das begleitbuch zur gleichnamigen zdf serie das handwerklich wunderschön gemachte 270 hochglanzseiten starke und reich illustrierte

das weltreich der deutschen von kolonialen traume - Aug 02 2022

web das weltreich der deutschen mar 11 2023 was wollten die deutschen in der südsee und in afrika waren sie brutale eroberer oder sanfte herren antworten findet

das weltreich der deutschen wikipedia - Apr 10 2023

das weltreich der deutschen ist ein deutscher dokumentarfilm von broadview tv aus dem jahr 2010 und der titel des buchs zum film gezeigt wird die kolonialgeschichte des deutschen kaiserreichs im wilhelminismus die reihe kombiniert dokumentation mit spielszenen regie führten sebastian dehnhardt ricarda schlosshan und manfred oldenburg co produzent ist das zdf vertreten durch den leiter der redaktion zeitgeschichte guido knopp als wissenschaftlic

deutsche kolonien wikipedia - Dec 06 2022

web die deutschen kolonien wurden vom deutschen reich seit den 1880er jahren angeeignet und nach dem ersten weltkrieg gemäß dem versailler vertrag von 1919 abgetreten

kolonialreich wikipedia - Mar 29 2022

web als kolonialreich bezeichnete man während der zeit des imperialismus und kolonialismus die gesamtheit der kolonien eines bestimmten staates des mutterlandes der jeweiligen

das weltreich der deutschen von kolonialen träumen kriegen - Oct 04 2022

web das deutsche zeitungsportal erkunden de en schließen die deutsche digitale bibliothek erforschen aktuell 45 531 606 objekte sie können festlegen ob einer der

das weltreich der deutschen von kolonialen träumen kriegen - Aug 14 2023

web das weltreich der deutschen ist das begleitbuch zur gleichnamigen zdf serie das handwerklich wunderschön gemachte 270 hochglanzseiten starke und reich illustrierte

das weltreich der deutschen von kolonialen traume full pdf - Dec 26 2021

web das weltreich der deutschen von kolonialen traume when people should go to the book stores search initiation by shop shelf by shelf it is in point of fact download and

das weltreich der deutschen von kolonialen träumen kriegen - Jan 07 2023
web das weltreich der deutschen von kolonialen träumen kriegen und abenteuern bücher gebraucht antiquarisch neu kaufen preisvergleich käuferschutz wir bücher
das weltreich der deutschen von kolonialen traume - Jan 27 2022
web could speedily download this das weltreich der deutschen von kolonialen traume after getting deal so subsequent to you require the book swiftly you can straight get it its as
das weltreich der deutschen von kolonialen traume pdf pdf - Sep 22 2021
web das weltreich der deutschen von kolonialen traume pdf upload dona z boyle 1 5 downloaded from voto uneal edu br on august 20 2023 by das weltreich der
das weltreich der deutschen von kolonialen träumen kriegen - Jul 13 2023
web das weltreich der deutschen ist das begleitbuch zur gleichnamigen zdf serie das handwerklich wunderschön gemachte 270 hochglanzseiten starke und reich illustrierte
sharp ar m700u user manual download pdf - Nov 26 2022
web browse online or download mx m550u n m620u n m700u n operation manual 28 pages copiers sharp ar m700u user manual pdf download free 0 31 mb related for
ar m700u sharp - Aug 04 2023
web pages per minute 70 b w paper capacity std 3100 max 6600 sheets professional job finishing includes booklet making and hole punching optional capable of printing on heavy paper 205g m² duplex printing several additional security features to protect your data and document from unauthorised access document filing function as standard
sharp ar m700u printers downloads drivers - Apr 19 2022
web here s where you can download the newest software for your ar m700u help drivers home printers sharp series ar serie ar m700u available 22 files for sharp ar m700u select files company sharp categories printers serie sharp ar serie model sharp original files in helpdrivers all drivers manuals bios etc are those
sharp ar m700u manuals manualsbrain com - Jan 29 2023
web following pdf manuals are available sharp ar m700u user manual
sharp ar m700u ar m550 ar m620 ar m700 operation manual - Oct 26 2022
web sharp ar m700u ar m550 ar m620 ar m700 operation manual page 7 machine instruction for service technician the cable length for the service terminal has to be less than 118 3m
sharp ar m700u all in one printer service manuals and - Jul 03 2023
web in the right menu you will find buttons with the help of which you can add a new user manual to the device sharp ar

m700u report a problem with the user manual e g no possibility to view the user manual online or to download the user manual sharp ar m700u to your computer

sharp ar m700n m700u complete service manual repair - Mar 31 2023

web official sharp ar m700n m700u copier printer service repair and workshop documentation this service and repair manual is used by the official certified sharp technicians it will help you to troubleshoot and repair your copier

sharp ar m700u user manual page 1 of 172 manualsbrain com - Sep 24 2022

web ar m700u read user manual online or download in pdf format pages in total 172

sharp ar m700u service manual user manuals com - May 01 2023

web sharp ar m700u it s a complete service manual and it s in pdf format it contains circuit diagrams schemas etc it also usually contains parts catalog after placing order we ll send you download instructions on your email address see below for delivery information the manual is available only in language s english german

sharp ar m550u technical manual pdf download - Jul 23 2022

web view and download sharp ar m550u technical manual online ar m550u all in one printer pdf manual download also for ar m620u ar m700u

sharp ar m700u manuals manualsdir com - Feb 27 2023

web sharp ar m700u manuals and user guides for free read online or download in pdf without registration manuals directory manualsdir com online owner manuals library

sharp ar m550n service manual pdf download manualslib - Dec 28 2022

web view and download sharp ar m550n service manual online ar m550n all in one printer pdf manual download also for ar m550u ar m700u ar m620n ar m620u ar m700n

sharp ar m700u manuals manualslib - Oct 06 2023

web we have 4 sharp ar m700u manuals available for free pdf download service manual operation manual installation manual technical manual sharp ar m700u service manual 460 pages brand sharp category all in one printer size 53 42 mb

sharp ar m700u ar m550 ar m620 ar m700 operation manual - Jun 21 2022

web as of february 2004 model product configuration ar m550u ar m620u ar m700u digital laser copier printer ar m550n ar m620n ar m700n digital multifunctional system operation manuals the following operation manuals are provided for the machine please read the appropriate manuals as needed for the features you wish to

user manual sharp ar m700u download your sharp ar m700u - May 21 2022

web user manual sharp ar m700u lastmanuals offers a socially driven service of sharing storing and searching manuals related to use of hardware and software user guide owner s manual quick start guide technical datasheets

sharp mx m700u software setup manual pdf - Feb 15 2022
web view and download sharp mx m700u software setup manual online digital multifunctional system mx m700u all in one printer pdf manual download also for mx m550u mx m620u mx m550n mx m620n mx m700n
sharp ar m700u user manual free download borrow and - Aug 24 2022
web vdom dhtml tml sharp ar m700u user manual free download borrow and streaming internet archive an illustration of a magnifying glass an illustration of a horizontal line over an up pointing arrow an illustration of a computer application window an illustration of an open book
microsoft sharp ar m700u printer drivers treexy - Mar 19 2022
web jun 21 2006 sharp ar m700u pcl 6 version 6 1 7233 0 date 21 june 2006 size 1 8 mb inf file prnsh001 inf download driver windows 11 10 8 1 8 7 x64 driver fusion the best software to update backup clean and monitor the drivers and devices of your pc update and backup drivers automatically
download sharp ar m700u service manual owner manuals - Sep 05 2023
web description of sharp ar m700u service manual complete service manual in digital format pdf file service manuals usually contains circuit diagrams printed circuit boards repair tips wiring diagrams block diagrams and parts list service manual sometimes called repair manual is used mainly by technicians
sharp ar m700 serv man7 service manual view online - Jun 02 2023
web nov 20 2018 download sharp ar m700 serv man7 service manual size 50 95 mb pages 127 in pdf or view online for free
en glad gut norwegian edition kindle edition amazon com - Jul 11 2023
web aug 22 2010 buy en glad gut norwegian edition read kindle store reviews amazon com amazon com en glad gut norwegian edition ebook bjørnson
editions of a happy boy by bjørnstjerne bjørnson goodreads - Aug 12 2023
web en glad gut kindle edition published august 22nd 2010 kindle edition 68 pages author s bjørnstjerne bjørnson asin b0040gj9es edition language norwegian average rating 3 93 en glad gut hardcover published 1971
en glad gut norwegian edition copy data northitalia - Oct 02 2022
web en glad gut primary source edition library of alexandria explores the vital role of women in the creation of norwegian american communities from farm to factory and as caregivers educators and writers
en glad gut fortælling norwegian edition softcover abebooks - Sep 13 2023
web en glad gut fortælling norwegian edition by bjørnson bjørnstjerne isbn 10 1016415176 isbn 13 9781016415170 legare street press 2022 softcover
en glad gut fortælling norwegian edition hardcover - Mar 27 2022

web oct 27 2022 en glad gut fortælling norwegian edition bjørnson bjørnstjerne on amazon com free shipping on qualifying offers en glad gut fortælling norwegian edition

tittelside bokselskap - Mar 07 2023

web om en glad gut bjørnsons bondefortellinger har en sentral plass i norsk litteraturhistorie de er på den ene siden pittoreske skildringer av livet på landsbygda i norge på 1800 tallet og på den andre siden realistiske skildringer av et klassesamfunn i endring

en glad gut norwegian edition by bjørnstjerne bjørnson - Jun 29 2022

web march 26th 2020 en glad gut norwegian edition kindle edition by bjørnstjerne bjørnson author 5 0 out of 5 stars 1 rating see all 5 formats and editions hide other formats and editions price new from used from kindle please retry

en glad gutt wikiwand - Feb 23 2022

web en glad gutt is a 1932 norwegian drama film directed by john w brunius starring tore foss hauk aabel and gøril havrevold the film is based on the story en glad gut by bjørnstjerne bjørnson published in 1860

amazon com customer reviews en glad gut norwegian edition - Jan 05 2023

web find helpful customer reviews and review ratings for en glad gut norwegian edition at amazon com read honest and unbiased product reviews from our users

en glad gut norwegian edition data northitalia com - Apr 27 2022

web this romance of norwegian country life is now almost universally regarded as his greatest achievement in its special field though a few critics award the first place to en glad gut a happy boy which was published shortly after arne in a volume of miscellanies also dated from bergen

bjørnstjerne bjørnson s en glad gut 1915 edition open library - Dec 04 2022

web bjørnstjerne bjørnson s en glad gut by bjørnstjerne bjørnson 1915 george banta publishing company edition in norwegian

en glad gut wikipedia republished wiki 2 - Nov 03 2022

web en glad gut a happy boy is a novel published in 1860 by the norwegian writer bjørnstjerne bjørnson it is one of his peasant novels

en glad gut norwegian edition by bjørnstjerne bjørnson goodreads - Jun 10 2023

web en glad gut er en fortelling av bjørnstjerne bjørnson den er en av bjørnsons bondefortellinger hovedpersonen Øyvind plassen er en husmannsgutt som ad utdanningens vei utdanning på landbruksskole omsider vinner et fotfeste i livet og derigjennom også sin elskede marit gårdjenta

en glad gut norwegian edition kindle edition amazon com au - Apr 08 2023

web en glad gut norwegian edition ebook bjørnson bjørnstjerne amazon com au kindle store

engladgutnorwegianedition 2022 logs erpnext - Jul 31 2022

web ovind a story of country life in norway library of alexandria this volume provides a critical examination of the lives and works of the leading novelists poets dramatists artists philosophers social thinkers mathematicians and scientists of the period

en glad gutt wikipedia - May 29 2022

web norwegian en glad gutt english a happy boy is a 1932 norwegian drama film directed by john w brunius starring tore foss hauk aabel and gøril havrevold the film is based on the story en glad gut by bjørnstjerne bjørnson published in 1860

ebook en glad gut norwegian edition - Sep 01 2022

web norwegian nobel laureate this novel was originally published in 1860 in norwegian as en glad gut which translates to the english title a happy boy the present edition of bjornstjerne bjornson s works is published by special arrangement with the author mr bjornson has designated prof rasmus b

en glad gut wikiwand - Feb 06 2023

web en glad gut a happy boy is a novel published in 1860 by the norwegian writer bjørnstjerne bjørnson it is one of his peasant novels

en glad gut norwegian edition kindle edition amazon com au - May 09 2023

web en glad gut norwegian edition ebook bjørnson bjørnstjerne amazon com au books

en glad gut wikipedia - Oct 14 2023

web en glad gut a happy boy is a novel published in 1860 by the norwegian writer bjørnstjerne bjørnson it is one of his peasant novels