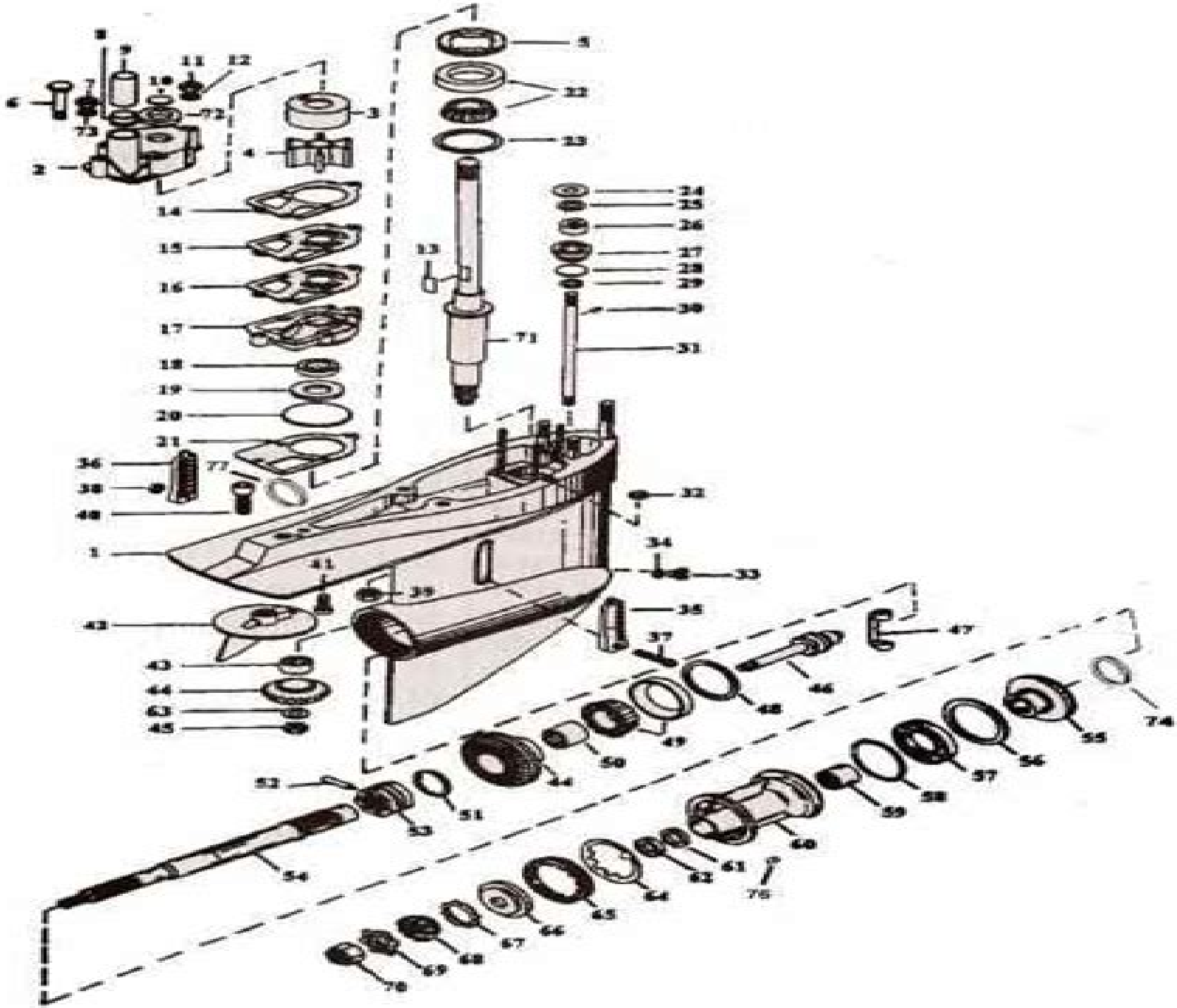

Mercruiser Alpha One Lower Unit Manual

WJ Hussar

Mercruiser Alpha One Lower Unit Manual:

Seloc Mercury Outboards 1965-89 Repair Manual Joan Coles,Clarence W. Coles,1998 **Mercury Stern Drive (1964 - 1992)** Seloc,1999-05-01 SELOC Marine maintenance and repair manuals offer the most comprehensive authoritative information available for outboard inboard stern drive and diesel engines as well as personal watercraft SELOC has been the leading source of how to information for the marine industry since 1974 Designed and written to serve the needs of the professional mechanic do it yourself boat enthusiast instructor and student these manuals are based on actual teardowns done by Chilton Marine s editors authors in our on site facility Providing complete coverage on everything from basic maintenance to engine overhaul every manual features Simple to follow step by step illustrated procedures Hundreds of exploded drawings photographs and tables Troubleshooting sections accurate specifications and wiring diagrams Recognized and used by technical trade schools as well as the U S military Covers Type 1 Alpha MR and Bravo I and II units powered by Ford and GM 4 cylinder in line 6 V6 and V8 engines Over 1 430 illustrations **Boating** ,1990-01 **Boating** ,2008-02 **Boating** ,1999-12 Boating ,1996-01 *The Outboard Boater's Handbook* David R. Getchell,1994 This comprehensive manual shows you how to go places and do things you never thought possible in a small outboard motorboat A well designed ruggedly built 17 footer for instance can fish offshore circumnavigate Lake Superior and crisscross the continent on inland waterways or on a trailer pulled by the family car Small outboards are among the most versatile boats ever developed and are far more able than you might expect Covered here are all the popular types and some exciting alternatives as well as methods that may change your entire boating outlook Aided by contributions from other experts veteran outboard skipper David R Getchell Sr offers a wealth of useful facts and special savvy that reveal for the first time in a single book the true potential of these democratic boats 20 feet and under Here are the means to understand what can be done and the way to do it safely including how to judge a boat s potential and capabilities based on design and construction how to rebuild an older boat how to handle a little boat in big seas surf or shallow water how to navigate how to read the weather how to head upriver or offshore how to trailer your boat how to manage and equip it for camp cruising on a nearby lake or for subarctic exploration and how to care for the boat and motor **Boating** ,1993-07 Lakeland Boating ,1996 **Ski** ,1997-02 **Glass-fibre Boat Repair** James Yates,1992 Aims to give enough knowledge for the average boat owner to effect repairs to the hull and superstructure of a glass fibre boat It also contains details on the care of the engine and the plumbing system Repair techniques are described for most of the common problems *Proceedings* ,1958 **The Science Teacher** ,1958 **Scientific and Technical Aerospace Reports** ,1972 *American Gas Engineering Journal* ,1930 **Engineering** ,1968-10 **Instruments, Industrial, Scientific** ,1990 Vols for 1938 44 1946 include an issue called the Instruments index published sometimes as pt 2 of a regular number sometimes as an extra number **English Mechanic and World of Science** ,1905 **Popular Electronics** ,1974 **Instruments and Automation** ,1958

When people should go to the book stores, search opening by shop, shelf by shelf, it is truly problematic. This is why we give the ebook compilations in this website. It will totally ease you to see guide **Mercruiser Alpha One Lower Unit Manual** as you such as.

By searching the title, publisher, or authors of guide you in fact want, you can discover them rapidly. In the house, workplace, or perhaps in your method can be every best place within net connections. If you goal to download and install the Mercruiser Alpha One Lower Unit Manual, it is completely simple then, previously currently we extend the link to buy and make bargains to download and install Mercruiser Alpha One Lower Unit Manual thus simple!

https://www.siliconezone.com/book/book-search/default.aspx/family%20walk%20family%20walk.pdf

Table of Contents Mercruiser Alpha One Lower Unit Manual

1. Understanding the eBook Mercruiser Alpha One Lower Unit Manual
    - The Rise of Digital Reading Mercruiser Alpha One Lower Unit Manual
    - Advantages of eBooks Over Traditional Books
2. Identifying Mercruiser Alpha One Lower Unit Manual
    - Exploring Different Genres
    - Considering Fiction vs. Non-Fiction
    - Determining Your Reading Goals
3. Choosing the Right eBook Platform
    - Popular eBook Platforms
    - Features to Look for in an Mercruiser Alpha One Lower Unit Manual
    - User-Friendly Interface
4. Exploring eBook Recommendations from Mercruiser Alpha One Lower Unit Manual
    - Personalized Recommendations
    - Mercruiser Alpha One Lower Unit Manual User Reviews and Ratings
    - Mercruiser Alpha One Lower Unit Manual and Bestseller Lists

5. Accessing Mercruiser Alpha One Lower Unit Manual Free and Paid eBooks
    - Mercruiser Alpha One Lower Unit Manual Public Domain eBooks
    - Mercruiser Alpha One Lower Unit Manual eBook Subscription Services
    - Mercruiser Alpha One Lower Unit Manual Budget-Friendly Options
6. Navigating Mercruiser Alpha One Lower Unit Manual eBook Formats
    - ePub, PDF, MOBI, and More
    - Mercruiser Alpha One Lower Unit Manual Compatibility with Devices
    - Mercruiser Alpha One Lower Unit Manual Enhanced eBook Features
7. Enhancing Your Reading Experience
    - Adjustable Fonts and Text Sizes of Mercruiser Alpha One Lower Unit Manual
    - Highlighting and Note-Taking Mercruiser Alpha One Lower Unit Manual
    - Interactive Elements Mercruiser Alpha One Lower Unit Manual
8. Staying Engaged with Mercruiser Alpha One Lower Unit Manual
    - Joining Online Reading Communities
    - Participating in Virtual Book Clubs
    - Following Authors and Publishers Mercruiser Alpha One Lower Unit Manual
9. Balancing eBooks and Physical Books Mercruiser Alpha One Lower Unit Manual
    - Benefits of a Digital Library
    - Creating a Diverse Reading Collection Mercruiser Alpha One Lower Unit Manual
10. Overcoming Reading Challenges
    - Dealing with Digital Eye Strain
    - Minimizing Distractions
    - Managing Screen Time
11. Cultivating a Reading Routine Mercruiser Alpha One Lower Unit Manual
    - Setting Reading Goals Mercruiser Alpha One Lower Unit Manual
    - Carving Out Dedicated Reading Time
12. Sourcing Reliable Information of Mercruiser Alpha One Lower Unit Manual
    - Fact-Checking eBook Content of Mercruiser Alpha One Lower Unit Manual
    - Distinguishing Credible Sources
13. Promoting Lifelong Learning

- Utilizing eBooks for Skill Development
- Exploring Educational eBooks

14. Embracing eBook Trends
    - Integration of Multimedia Elements
    - Interactive and Gamified eBooks

Mercruiser Alpha One Lower Unit Manual Introduction

Free PDF Books and Manuals for Download: Unlocking Knowledge at Your Fingertips In todays fast-paced digital age, obtaining valuable knowledge has become easier than ever. Thanks to the internet, a vast array of books and manuals are now available for free download in PDF format. Whether you are a student, professional, or simply an avid reader, this treasure trove of downloadable resources offers a wealth of information, conveniently accessible anytime, anywhere. The advent of online libraries and platforms dedicated to sharing knowledge has revolutionized the way we consume information. No longer confined to physical libraries or bookstores, readers can now access an extensive collection of digital books and manuals with just a few clicks. These resources, available in PDF, Microsoft Word, and PowerPoint formats, cater to a wide range of interests, including literature, technology, science, history, and much more. One notable platform where you can explore and download free Mercruiser Alpha One Lower Unit Manual PDF books and manuals is the internets largest free library. Hosted online, this catalog compiles a vast assortment of documents, making it a veritable goldmine of knowledge. With its easy-to-use website interface and customizable PDF generator, this platform offers a user-friendly experience, allowing individuals to effortlessly navigate and access the information they seek. The availability of free PDF books and manuals on this platform demonstrates its commitment to democratizing education and empowering individuals with the tools needed to succeed in their chosen fields. It allows anyone, regardless of their background or financial limitations, to expand their horizons and gain insights from experts in various disciplines. One of the most significant advantages of downloading PDF books and manuals lies in their portability. Unlike physical copies, digital books can be stored and carried on a single device, such as a tablet or smartphone, saving valuable space and weight. This convenience makes it possible for readers to have their entire library at their fingertips, whether they are commuting, traveling, or simply enjoying a lazy afternoon at home. Additionally, digital files are easily searchable, enabling readers to locate specific information within seconds. With a few keystrokes, users can search for keywords, topics, or phrases, making research and finding relevant information a breeze. This efficiency saves time and effort, streamlining the learning process and allowing individuals to focus on extracting the information they need. Furthermore, the availability of free PDF books and manuals fosters a culture of continuous learning. By removing financial barriers, more people can access educational resources and pursue lifelong

learning, contributing to personal growth and professional development. This democratization of knowledge promotes intellectual curiosity and empowers individuals to become lifelong learners, promoting progress and innovation in various fields. It is worth noting that while accessing free Mercruiser Alpha One Lower Unit Manual PDF books and manuals is convenient and cost-effective, it is vital to respect copyright laws and intellectual property rights. Platforms offering free downloads often operate within legal boundaries, ensuring that the materials they provide are either in the public domain or authorized for distribution. By adhering to copyright laws, users can enjoy the benefits of free access to knowledge while supporting the authors and publishers who make these resources available. In conclusion, the availability of Mercruiser Alpha One Lower Unit Manual free PDF books and manuals for download has revolutionized the way we access and consume knowledge. With just a few clicks, individuals can explore a vast collection of resources across different disciplines, all free of charge. This accessibility empowers individuals to become lifelong learners, contributing to personal growth, professional development, and the advancement of society as a whole. So why not unlock a world of knowledge today? Start exploring the vast sea of free PDF books and manuals waiting to be discovered right at your fingertips.

FAQs About Mercruiser Alpha One Lower Unit Manual Books

What is a Mercruiser Alpha One Lower Unit Manual PDF? A PDF (Portable Document Format) is a file format developed by Adobe that preserves the layout and formatting of a document, regardless of the software, hardware, or operating system used to view or print it. **How do I create a Mercruiser Alpha One Lower Unit Manual PDF?** There are several ways to create a PDF: Use software like Adobe Acrobat, Microsoft Word, or Google Docs, which often have built-in PDF creation tools. Print to PDF: Many applications and operating systems have a "Print to PDF" option that allows you to save a document as a PDF file instead of printing it on paper. Online converters: There are various online tools that can convert different file types to PDF. **How do I edit a Mercruiser Alpha One Lower Unit Manual PDF?** Editing a PDF can be done with software like Adobe Acrobat, which allows direct editing of text, images, and other elements within the PDF. Some free tools, like PDFescape or Smallpdf, also offer basic editing capabilities. **How do I convert a Mercruiser Alpha One Lower Unit Manual PDF to another file format?** There are multiple ways to convert a PDF to another format: Use online converters like Smallpdf, Zamzar, or Adobe Acrobats export feature to convert PDFs to formats like Word, Excel, JPEG, etc. Software like Adobe Acrobat, Microsoft Word, or other PDF editors may have options to export or save PDFs in different formats. **How do I password-protect a Mercruiser Alpha One Lower Unit Manual PDF?** Most PDF editing software allows you to add password protection. In Adobe Acrobat, for instance, you can go to "File" -> "Properties" -> "Security" to set a password to restrict access or editing capabilities. Are there any free alternatives to Adobe Acrobat for working with PDFs? Yes, there are

many free alternatives for working with PDFs, such as: LibreOffice: Offers PDF editing features. PDFsam: Allows splitting, merging, and editing PDFs. Foxit Reader: Provides basic PDF viewing and editing capabilities. How do I compress a PDF file? You can use online tools like Smallpdf, ILovePDF, or desktop software like Adobe Acrobat to compress PDF files without significant quality loss. Compression reduces the file size, making it easier to share and download. Can I fill out forms in a PDF file? Yes, most PDF viewers/editors like Adobe Acrobat, Preview (on Mac), or various online tools allow you to fill out forms in PDF files by selecting text fields and entering information. Are there any restrictions when working with PDFs? Some PDFs might have restrictions set by their creator, such as password protection, editing restrictions, or print restrictions. Breaking these restrictions might require specific software or tools, which may or may not be legal depending on the circumstances and local laws.

Find Mercruiser Alpha One Lower Unit Manual :

~~family walk family walk~~
famine a short history
falken greifv gel tischkalender blitzschnelle monatskalender
~~falcon the quiet professionals~~
families as they really are second edition
~~family recipe book template~~
fantastic stories presents science fiction super pack 1 with linked table of contents
~~falle domina eine sm kurzgeschichte ebook~~
~~fallout 3 trophy guide walkthrough~~
~~faithful a theology of sex ordinary theology~~
fantasy authors a research guide author research
fandw media david and charles books from passion to profit
~~fantasy football cheat sheet 2013~~
falling off the mountain
~~fall of knight a knights story volume 1~~

Mercruiser Alpha One Lower Unit Manual :

La Divina Foresta Studi Danteschi Paperback Full PDF La Divina Foresta Studi Danteschi Paperback la-divina-foresta-studi-

danteschi-paperback. 2. Downloaded from staging.online.hylesanderson.edu on. 2022-07-18 by ... La divina foresta. Studi danteschi La divina foresta. Studi danteschi. by Francesco Spera, F. Spera (Editor). Unknown, 307 Pages, Published 2006 ; ISBN-10: 88-7092-265-0 / 8870922650. ISBN-13: 978 ... La divina foresta: studi danteschi La divina foresta: studi danteschi ... Il volume raccoglie i saggi di Francesco Spera, Guglielmo Barocci, Cristina Bon, Silvia De Pol, Sandra Carapezza, Claudia ... La divina foresta. Studi danteschi con Spedizione Gratuita Editore: D'Auria M. · Collana: Biblioteca D'Auria · A cura di: F. Spera · Data di Pubblicazione: 2006 · EAN: 9788870922653 · ISBN: 8870922650 · Pagine: 307 · Formato: ... La divina foresta. Studi danteschi di Spera F. (cur.) Il volume raccoglie i saggi di Francesco Spera, Guglielmo Barocci, Cristina Bon, Silvia De Pol, Sandra Carapezza, Claudia Cravenna, Maria Elsa Raja. La divina foresta. Studi danteschi Editore: D'Auria M. Collana: Biblioteca D'Auria In commercio dal: 2006. Pagine: 307 p., Libro in brossura. EAN: 9788870922653. La divina foresta. Studi danteschi - - Libro Il volume raccoglie i saggi di Francesco Spera, Guglielmo Barocci, Cristina Bon, Silvia De Pol, Sandra Carapezza, Claudia Cravenna, Maria Elsa Raja. La divina foresta : studi danteschi by F Spera · 2006 — La divina foresta : studi danteschi / [a cura di] F. Spera. - Napoli : D'Auria, 2006. Tipologia. Book (editor). Appare nelle tipologie: 06 - Curatela di ... F. Spera: Libri In versi e in prosa. Storia e antologia della letteratura italiana nel contesto culturale europeo. Per le Scuole superiori. Con e-book. Con espansione online. Endovascular Skills: 9781482217377 The book introduces readers to strategy, vascular access, guidewire–catheter handling, and arteriography in a multitude of vascular beds. The knowledge base ... Endovascular Skills: Guidewire and... by Peter A. Schneider Endovascular Skills: Guidewire and Catheter Skills for Endovascular Surgery, Second Edition, Revised and Expanded [Peter A. Schneider] on Amazon.com. Guidewire and Catheter Skills for Endovascular Surgery ... Endovascular Skills: Guidewire and Catheter Skills for Endovascular Surgery, Second Edition, Revised and Expanded - Hardcover ; PublisherMarcel Dekker, Inc. Guidewire and Catheter Skills for Endovascular Su This book serves as a “how-to” guide for endovascular intervention and aims to assist clinicians in the development and refinement of skills that are now ... Guidewire and catheter skills for endovascular surgery ... Endovascular skills: Guidewire and catheter skills for endovascular surgery, second edition. January 2003. DOI:10.1201/9780429156304. ISBN: 9780429156304. Guidewire and Catheter Skills for Endovascular Surgery Endovascular Skills: Guidewire and Catheter Skills for Endovascular Surgery, Second Edition by Peter A. Schneider May have limited writing in cover pages. Guidewire and Catheter Skills for Endovascular S by P Schneider · 2003 · Cited by 322 — Offers step-by-step instruction on every aspect of endovascular therapy and provides clear illustrations and consultation segments, ... Guidewire and Catheter Skills for Endovascular Surgery ... Endovascular Skills · Guidewire and Catheter Skills for Endovascular Surgery, Second Edition, Revised and Expanded. ; ISBN 10: 0824742486 ; ISBN 13: 9780824742485 ... Guidewire and Catheter Skills for Endovascular Surgery ... Offers step-by-step instruction on every aspect of endovascular therapy and provides clear illustrations and consultation segments, as well as alternate ... Guidewire and Catheter Skills for Endovascular Surgery ... Endovascular Skills:

Guidewire and Catheter Skills for Endovascular Surgery, Second Edition, Revised and Expanded. Used; very good; Hardcover. Edexcel GCSE ICT Revision Guide ... This book is good for revision and has great end of unit summary questions, but they give little detail when explaining things which, if you're revising for ... Digital Devices - Part 1 - Edexcel IGCSE ICT 9-1 - YouTube Edexcel IGCSE - ICT - Chapter 1 - Lesson 1 Digital Devices ... GCSE ICT This unit provides an introduction to the modern online world. We will base the course around your current knowledge and build on it to investigate a range ... Edexcel GCSE ICT Revision Guide & Workbook Sample Edexcel GCSE ICT Revision Guide & Workbook Sample - Free download as PDF File (.pdf), Text File (.txt) or read online for free. This is our GCSE ICT sample ... Roger Crawford - Edexcel international GCSE ... Jan 5, 2019 — Check Pages 1-50 of Roger Crawford - Edexcel international GCSE ICT. Revision guide (2013, Pearson Education) in the flip PDF version. GCSE ICT Revision Guides Is the GCSE ICT exam looming? Revise and ace the exams with our adaptive GCSE ICT revision guides and flashcards. Top GCSE ICT Flashcards Ranked by Quality. IGCSE Edexcel ICT Revision Guide Digital • A digital video camera or camcorder records moving images with sound. Recordings can be saved on a memory card or built-in hard disk, and input to a ... International-GCSE-ICT-Student-Book-sample.pdf You can personalise your ActiveBook with notes, highlights and links to your wider reading. It is perfect for supporting your coursework and revision activities ... ICT GCSE Edexcel Chapter 1 - Living in a Digital World GCSE ICT revision notes. 0.0 / 5. ICT GCSE EDEXCEL REVISION. 3.0 / 5 based on 2 ratings. See all ICT resources »See all Communications resources ...